Installation Guidelines

NOVADISPLAY®
INNOVATIVE DISPLAY SOLUTIONS

1.5mm Cable Display Systems

800.753.9688 • www.novadisplay.com

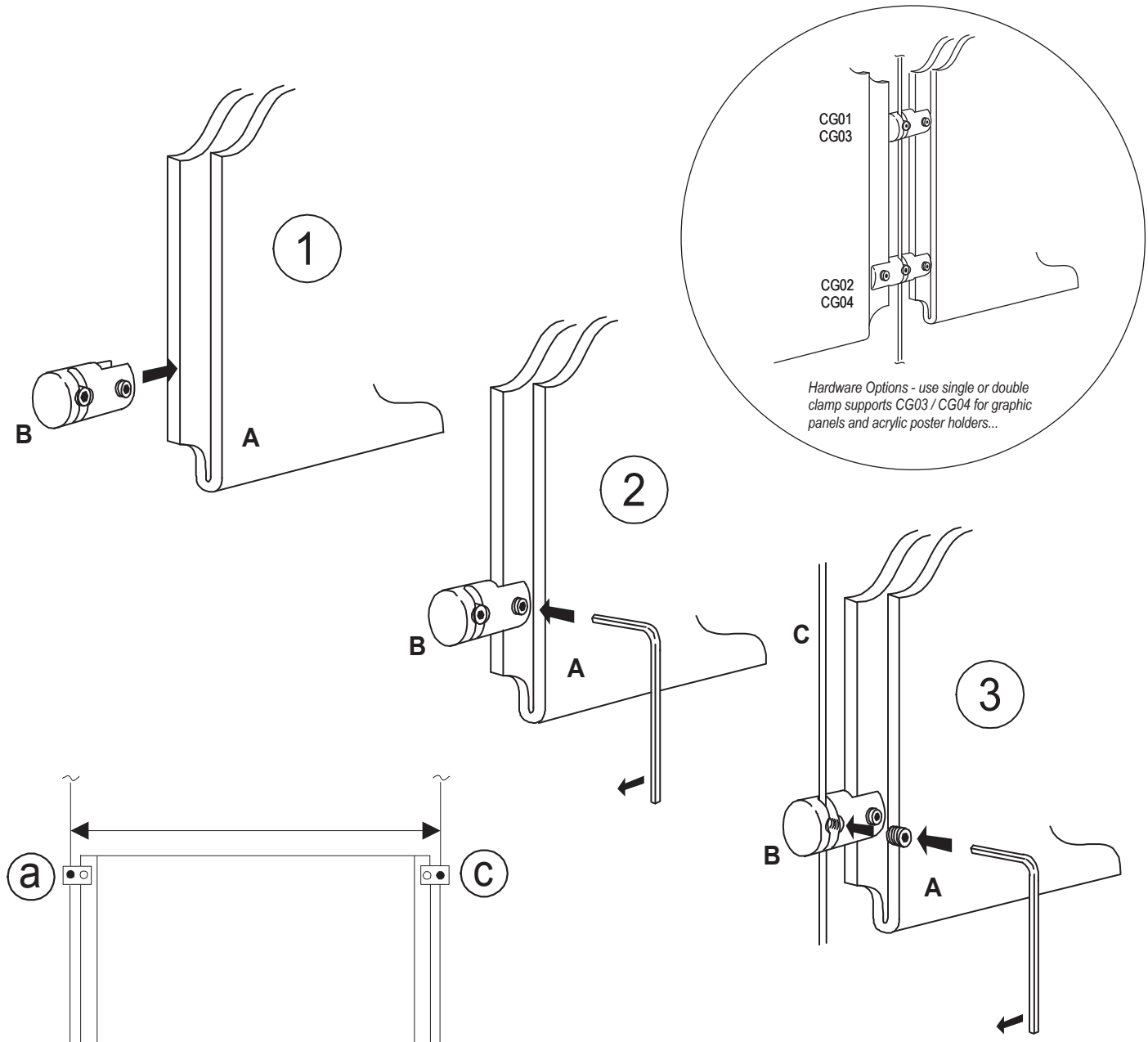

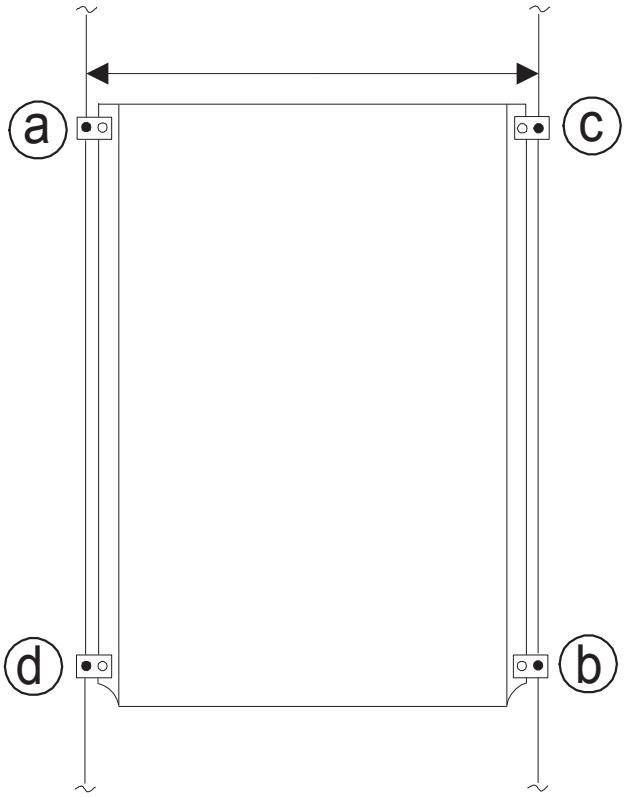

Easy Access Acrylic Pocket - Cable Attachment

1) Insert the pocket (**A**) into the jaws of fittings (**B**) and tighten with the Allen-key supplied. The working side of the fitting should face the rear of the display. Be careful not to over tighten as this may damage the pocket.

2) Ensure that the fittings are lined up upon either side of the pocket.

3) Fit the pocket to the cable (**C**), and lightly tighten the grub screws in the order shown in the left diagram.

5) Repeat the procedure to complete the top row of pockets. Use a spirit level to check that the pockets are level.

6) Repeat this procedure to fit the other pockets, leaving 50mm between each row.