# Installation Guidelines

NOVADISPLAY®
INNOVATIVE DISPLAY SOLUTIONS

## EasyGlide Track

800.753.9688 www.novadisplay.com

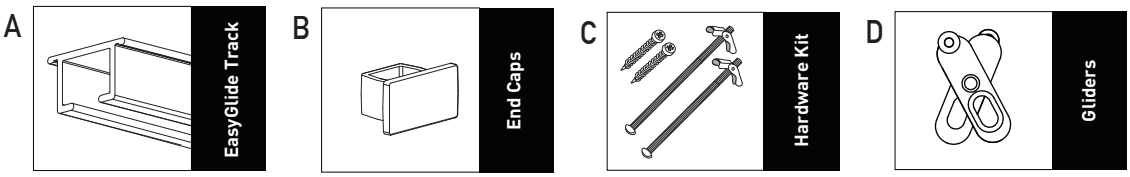


1

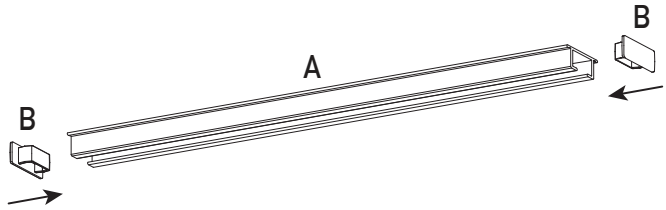


2

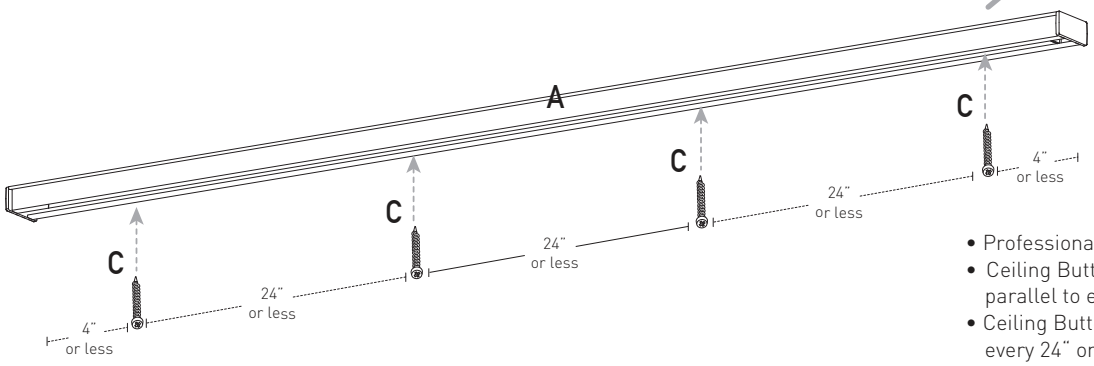


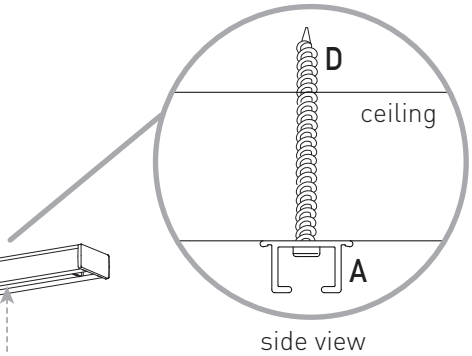


- Professional installation recommended.
- Ceiling Butterfly Tracks must be mounted parallel to each other no greater than 24" apart.
- Ceiling Butterfly Tracks must be anchored every 24" or less, and within 4" of the ends.

- Use 9/64" drill bit to drill holes in track.
- Use #48 or 1/16" drill for pilot holes in wood when installing with wood screws.
- Use a 3/8" drill bit for plasterboard/ drywall when installing toggle bolts.

3

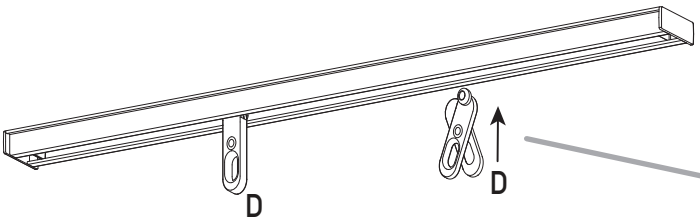


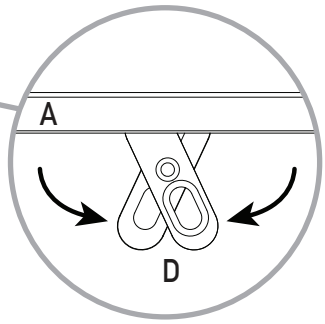


4
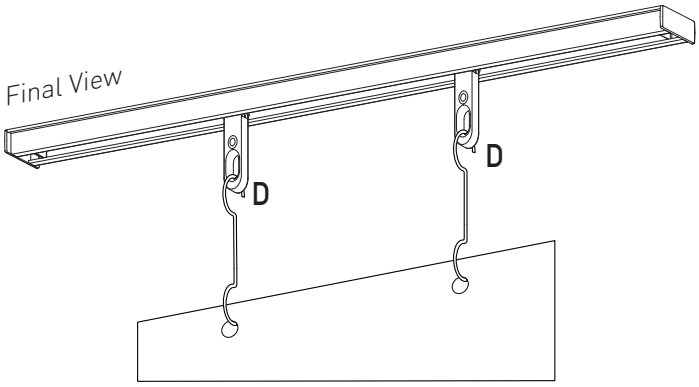
Final View